626 Super Mill

Operation Manual

Chester UK Ltd
Clwyd Close
Hawarden Industrial Park
Hawarden
Chester CH5 3PZ

Tel: 01244 531631

READ THIS MANUAL CAREFULLY

It is essential to give the serial number of your machine in any order of repair
Parts to assure prompt and accurate service
Order repair parts by numbers, description and machine serial number

VERTICAL MILLING MACHINE

Table size		660×156mm
Longitudinal travel		360mm
Cross travel		160mm
Vertical knee travel		280mm
Quill travel		80mm
Max.distance spindle to table		310mm
Spindle taper		R8 or MT3
Vertical head tilting angle(R&L)		±45°
Ram swiveling angle		360°
Spindle speeds(9)	50Hz:190-2100rpm;	60Hz: 230-2520rpm
Drive motor		1.5KW
Net weight (approx)		330KG
Shipping weight		375KG

REFERENCE DIMENSIONS:

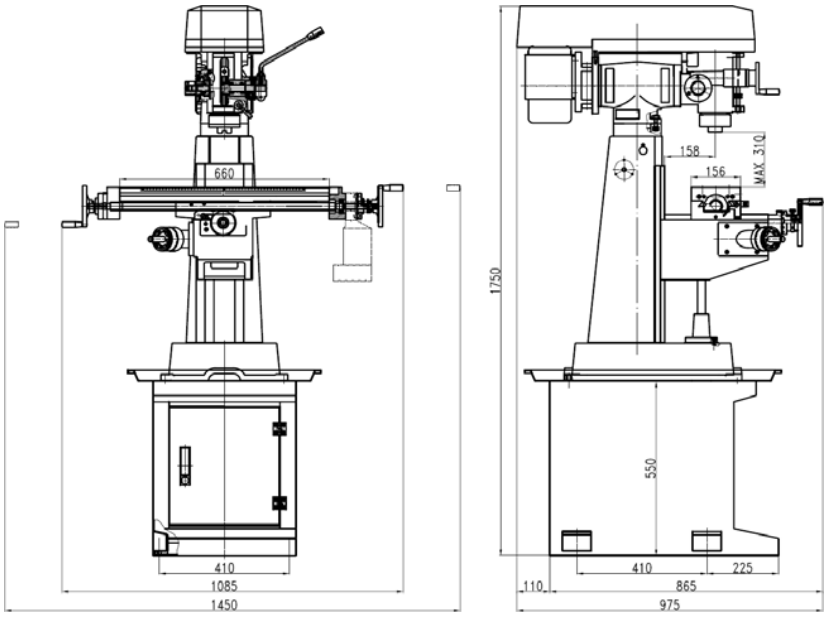

FEATURES:

1、 Model is a compact vertical milling machine. It is easy to set up .the controls are designed for operator convenience with dual table hand wheel.

2、 It is very practical for technical schools, small parts productions, toolrooms, R&D work, maintenance shops and even hobby use.

3、 The machine is ideally suited for many operations, including milling, compound angle milling, engraving, drilling and jig boring.

4、 All “ways” are hand scraped for perfect bearing and alignment. The table is ground for perfect square ness.

5、 Castings are high strength material. They are aged for several months, before normalizing and tempering, tominimize deformation.

NOTICE

1、 Remove protective crating and sikds carefully,in the event of damage in transit, contact our representative and the transportation company making delivery.

2、 The machine is carefully inspected and tested in operation by Q.C. personnel before it leaves our factory. If any defects are

found on delivery write us directly.

3、 Read the catalogue and become familiar with the parts locations on the drawings as it will be easier to understand this operator's manual.

I INSTALLATION:

To set the machine on a solid concrete foundation, it' s advisable to apply a little grout to touch up any unevenness in the concrete in order to get a solid foundation at all points. When setting machine on a floor that has any surface irregularities, shims should be used to correct this condition to the greatest extent possible.

II PRE-LUBRICATION:

Thoroughly clean the machine with gasoline or kerosene, then lubricate all the slide ways with S.A.E.

#10 and gears with S.A.E.#30 lubricant.be sure the machine is lubricated properly before starting.

III LEVELLING MACHINES:

Set machines by levelling the work table lengthwise and crosswise with a precision levelling instrument(refer to the test readings in the attached test records).

IV INSPECTION:

Inspect the machine with the attached original testing records

for reference.

V SWITCH BOX:

Switch box is located on the left side of the column, on-off only.

VI ADJUSTMENT OF TABLE FEED TRAVEL:

Table longitudinal and cross feed can be set for any travel distance by adjusting stop set screws that are located in front of table and at the right side of knee.

VII ADJUSTMENT OF TABLE GIB:

The table is provided with a full length tapered gib in the saddle with an adjusting screw on each end.to take up gib tighten the two screws until a slight drag is felt when moving the table by hand. If the table is not tight enough, loosen the adjusting screw on small end, and tighten up adjusting screw on big end. If feel is too tight, reverse the adjusting procedures.

VIII ADJUSTMENT OF SADDLE AND KNEE GIBS:

To tighten gibs the same method as described above is used

IX CLAMPING TABLE, SADDLE AND KNEE:

When milling with longitudinal table feed only, it is advisable to clamp the knee with the column and the saddle with the knee to add rigidity to these members and provide for heavier cuts with a minimum of vibration. The saddle locking lever is located on the left side of saddle to the operator, apply clamping

pressure properly, as this will hold saddle sufficiently rigid. The table clamping levers are located in front of saddle an should always be clamped when longitudinal movement is not required.

The knee clamping lever is at the left side of knee, leave clamped at all times unless the knee is in operation.

X REMOVING TABLE:

Remove the table as follows: hand wheel, dial holder, bearing bracket, turn the lead screw all way, so that it can be removed, complete all the steps then the table can be disassembled easily.

XI REMOVING SADDLE:

Remove as follows: hand wheel, dial holder, bearing bracket, turn the leadscrew all the way, loosen set screw on the middle of saddle, take off the lead screw nut, and draw saddle gib out, the saddle can then be removed.

XII MOUNTING MOTOR AND SHIFTING BELTS FOR SPEEDS:

Motor is mounted on a plate hinged to the pulley housing. Release the belt set unit by turning the handle at the side of motor, then shift belts to proper speed as desired ,then tighten the belt set unit, a speed change chart is attached inside the pully cover.

XIII QUILL LOCK AND VERTICAL FEED:

The handle at the right lower corner of the head is the quill lock. When vertical feed is not in use, set the handle to lock the quill and make the head more stable.

The micrometer depth stop is graduated in inches.by utilizing these simple graduations, it is possible to work very accurately to different depths, a lock nut under the micrometer nut assures that the micrometer nut is secured properly.

XVI QUILL CLUTCH OF VERTICAL MILLING HEAD:

The vertical feed is controlled by a hand wheel at the front of the head and a handle at the right hand of the head. When hand wheel is in use tighten the clutch lock nut by hand, or loosen it for handle operation, use hand wheel for fine feeds, handle for fast feeds.

XV VERTICAL HEAD AND TEE ADAPTER:

Vertical milling head can be tilted 90° on each side by loosening the four locking bolts on tee adapter. Loosen two set bolts on the adapter, the vertical milling head can then be swiveled 120°; tighten the set bolts after swiveling. The motor and milling head must tilt together for the motor and head are suspended on the same pulley housing.

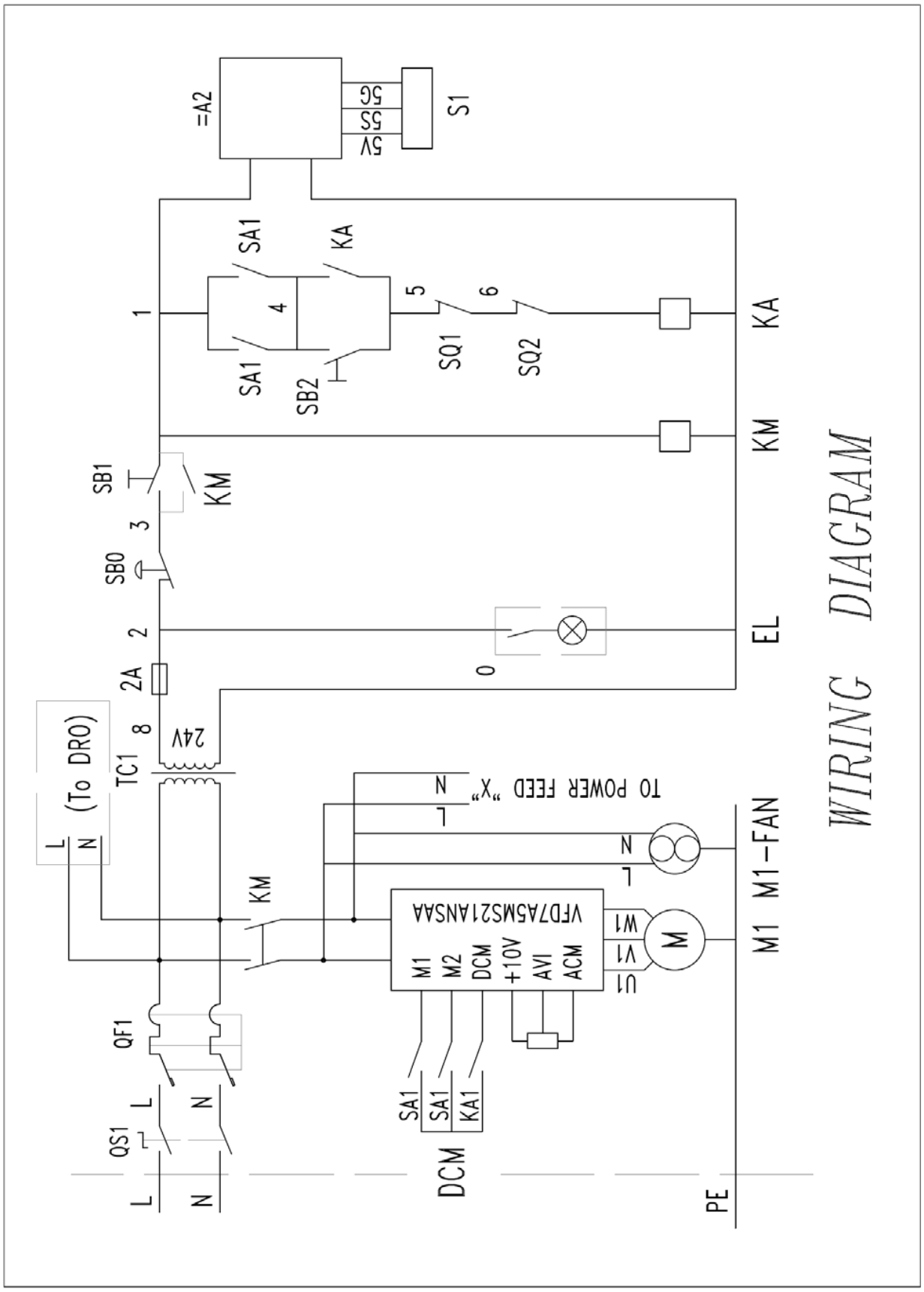
WIRING DIAGRAM
=A2
5V
5S
5G
S1
SA1
KA
1
4
5
6
SA1
SB2
SQ1
SQ2
KA
KM
SB1
KM
3
SB0
2
EL
0
2A
8
24V
TC1
(To DRO)
L
N
KM
TO POWER FEED "X"
N
L
N
L
VFD7A5MS21ANSAA
M1
M2
DCM
+10V
AVI
ACM
W1
V1
U1
M
M1 M1-FAN
QF1
QS1
L
N
L
N
SA1
SA1
KA1
DCM
PE

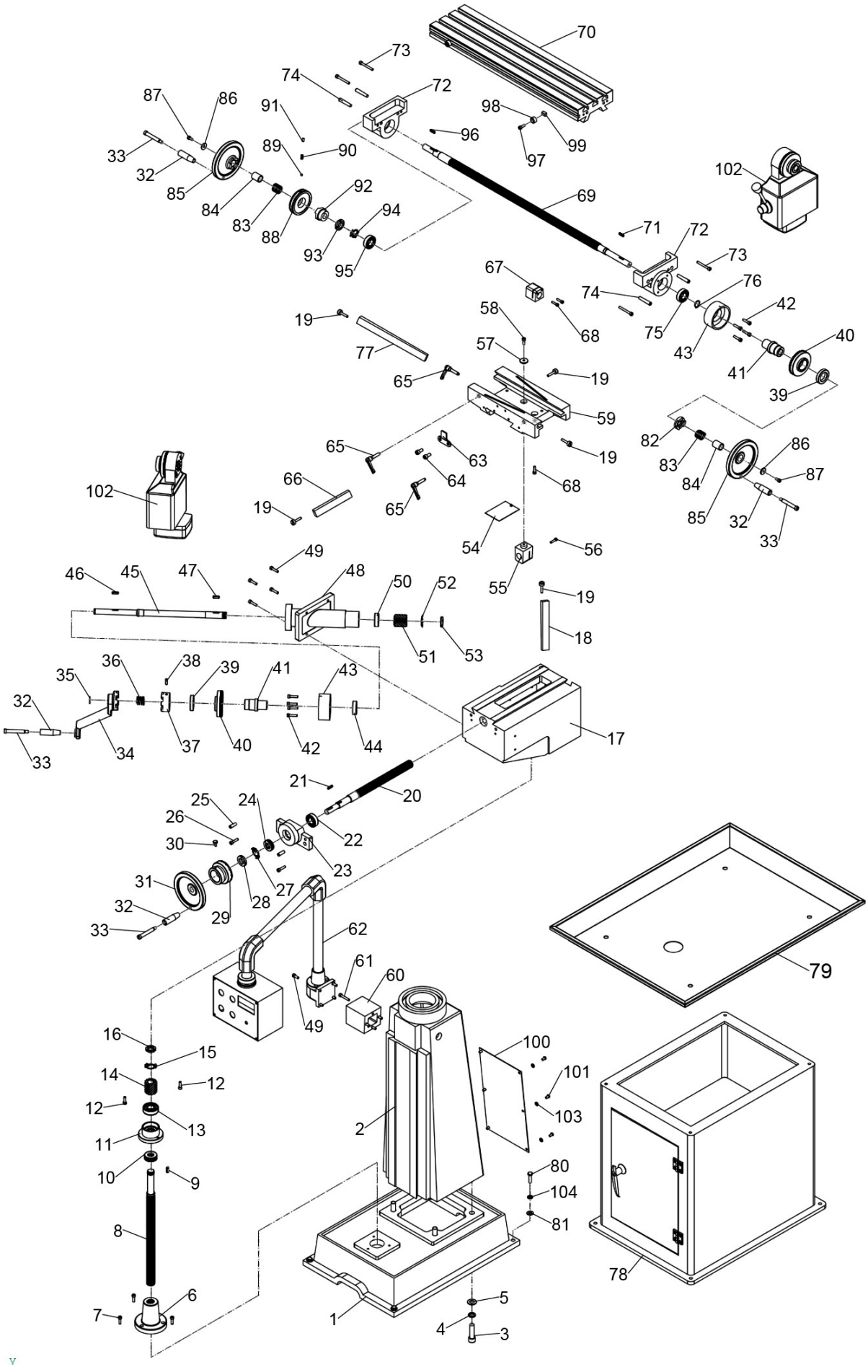
70
73
74
72
87
86
91
98
96
99
33
89
90
97
32
102
85
92
69
84
94
83
88
71
72
93
95
73
67
76
74
42
58
19
68
75
40
77
57
43
41
65
19
39
59
82
65
63
19
86
83
87
66
64
68
84
102
19
65
85
32
33
54
56
49
46
45
47
48
50
52
55
19
18
51
53
36
38
39
41
43
35
32
17
37
40
42
44
34
33
21
20
25
24
26
22
30
23
31
27
28
32
29
33
62
79
61
60
49
16
100
15
101
14
12
12
103
13
2
11
80
10
9
104
81
8
78
6
5
7
1
4
3

Main parts list

NO	PART	DESCRIPTION	QTY
1	ZX5015-01-01	Base	1
2	ZX5015-02-01	Column	1
3	GB/T70.1-2000	Hex bolt M14x50	4
4		Washer M14	4
5		Washer M14	4
6	ZX5015-03-02	Elevation lead screw set nut	1
7	GB/T70.1-2000	Cap screw M6x20	3
8	ZX5015-03-03	Elevation leadscrew	1
9	GB/T1096-2003	Key 6x20	1
10	GB/T310-1995	Ball bearing 51204	1
11	ZX5015-03-05	Elevation bearing base	1
12	GB/T70.1-2000	Hex bolt M6x20	2
13	GB/T276-1994	Ball bearing 6204-2RS	1
14	ZX45-02-03	Elevation gear	1
15	GB/T858-1988	Spanner washer 20	1
16	GB/T810-1988	Spanner nut M20x1.5	1
17	ZX5015-01-01	Elevation work table	1
18	ZX5015-03-12	Gib	1
19	ZX5015-03-13	Gib adjust screw	6
20	ZX5015-04-02	Cross leadscrew	1
21	GB/T1096-2003	Key 5x20	1
22	GB/T276-1994	Ball bearing 6004-2RS	1
23	ZX5015-04-04	Bearing bracket	1
24	GB/T276-1994	Ball bearing 51104	1
25	GB/T118-2000	Pin 8x25	2
26	GB/T70.1-2000	Hex bolt M6x16	2
27	GB/T858-1988	Spanner washer 20	1
28	GB/T810-1988	Spanner nut M20x1.5	1
29	ZX5015-05-06	Graduated dial	1
30	GB/T73-1985	Adjust screw M6x16	1
31	ZX5015-06-40	Hand wheel	1
32	ZX5015-06-41	Handle	4
33		Handle screw	4
34	ZX5015-03-10	Elevation crank	1
35	GB/T894.1-1986	Special retaining ring 17	1
36		Spring 20X20	1
37	ZX5015-03-10D.2	Elevation handle clutch	1
38	GB/T77-2000	Screw	1
39	ZX5015-08-02D	Adjust nut	2

Main Breakdown

NO	PART	DESCRIPTION	QTY
40	ZX45-01-06C	Graduated dial	2
41	ZX5015-08-01D	Bush	2
42	GB/T70.1-2000	Hex bolt M6x25	8
43	ZX5015-08-03D	Adapter sleeve	2
44	GB/T276-1994	Ball bearing 6004-2RS	1
45	ZX5015-03-07D	Elevation shaft	1
46	GB/T1096-2003	Key 5x20	1
47	GB/T1096-2003	Key 6x20	1
48	ZX5015-03-05D	Gear shaft sleeve	1
49	GB/T70.1-2000	Cap screw M6x20	10
50	GB/T276-1994	Ball bearing 6004-2RS	1
51	ZX45-02-03	Elevation gear	1
52	GB/T858-1988	Spanner washer 20	1
53	GB/T810-1988	Spanner nut M20x1.5	1
54		Splash guard	1
55	ZX5015-04-03	Cross leadscrew nut	1
56	GB/T70.1-2000	Hex bolt M5x25	1
57	ZX5015-03-15	Washer	1
58	GB/T70.1-2000	Hex bolt M6x20	1
59		Saddle	1
60	ZX5025-10-01.2	Electric control box support	1
61	GB/T70.1-2000	Hex bolt M6x35	4
62	ZX5025-10-09B	Power control box	1
63	ZX30-04-10	Fixed block	1
64	GB/T70.1-2000	Hex bolt M6x16	2
65		Adjust screw	3
66	ZX5015-04-09	Gib	1
67	ZX5015-05-03	Longitudinal leadscrew nut	1
68	GB/T70.1-2000	Hex bolt M5x25	2
69	ZX5015-05-02	Longitudinal leadscrew	1
70	ZX5015-05-01	Work table	1
71	GB/T1096-2003	Key 5x20	1
72	ZX5015-05-04	Longitudinal bearing bracket	2
73	GB/T70.1-2000	Hex bolt M6x50	4
74	GB/T118-2000	Pin 8x50	4
75	GB/T276-1994	Ball bearing 6204-2RS	1
76	GB/T894.1-1986	Special retaining ring 17	1
77	ZX5025-05-09	Gib	1
78		Cabinet base	1
79		Oil pan	1

Main Breakdown

NO	PART	DESCRIPTION	QTY
80	GB/T70.1-2000	Hex bolt M10x45	4
81		Washer 10	4
82	ZX7550C-08-03D	Clutch	1
83	ZX7550C-08-05B	Spring	2
84	ZX7550C-08-04B	Spacer bush	2
85	ZX5015-08-06D	Handwheel	2
86	ZX5015-08-07D	Washer	2
87	GB/T70.1-2000	Cap screw M6x12	2
88	ZX5015-08-05D	Graduated dial	1
89	GB/T308-84	Steel ball	1
90	JZ08-026-11	Spring	1
91	GB/T70.1-2000	Cap screw M6x8	1
92	ZX5015-08-04D	Clutch	2
93	GB/T810-1988	Spanner nut M20x1.5	1
94	GB/T858-1988	Spanner washer 20	1
95	GB/T276-1994	Ball bearing 6204-2RS	1
96	GB/T1096-2003	Key 5x16	1
97	GB/T70.1-2000	Screw M6x16	2
98	ZX30-04-09	Retaining ring	2
99	ZX30-04-08	Nut M6	2
100	ZX5015-07-03	Rear column cover	1
101	GB67-76	Screw M6x12	6
102		Power feed	(optional)
103		Washer 6	6
104		Washer 10	4
105			
106			
107			
108			
109			
110			
111			
112			
113			
114			
115			
116			
117			
118			
119			

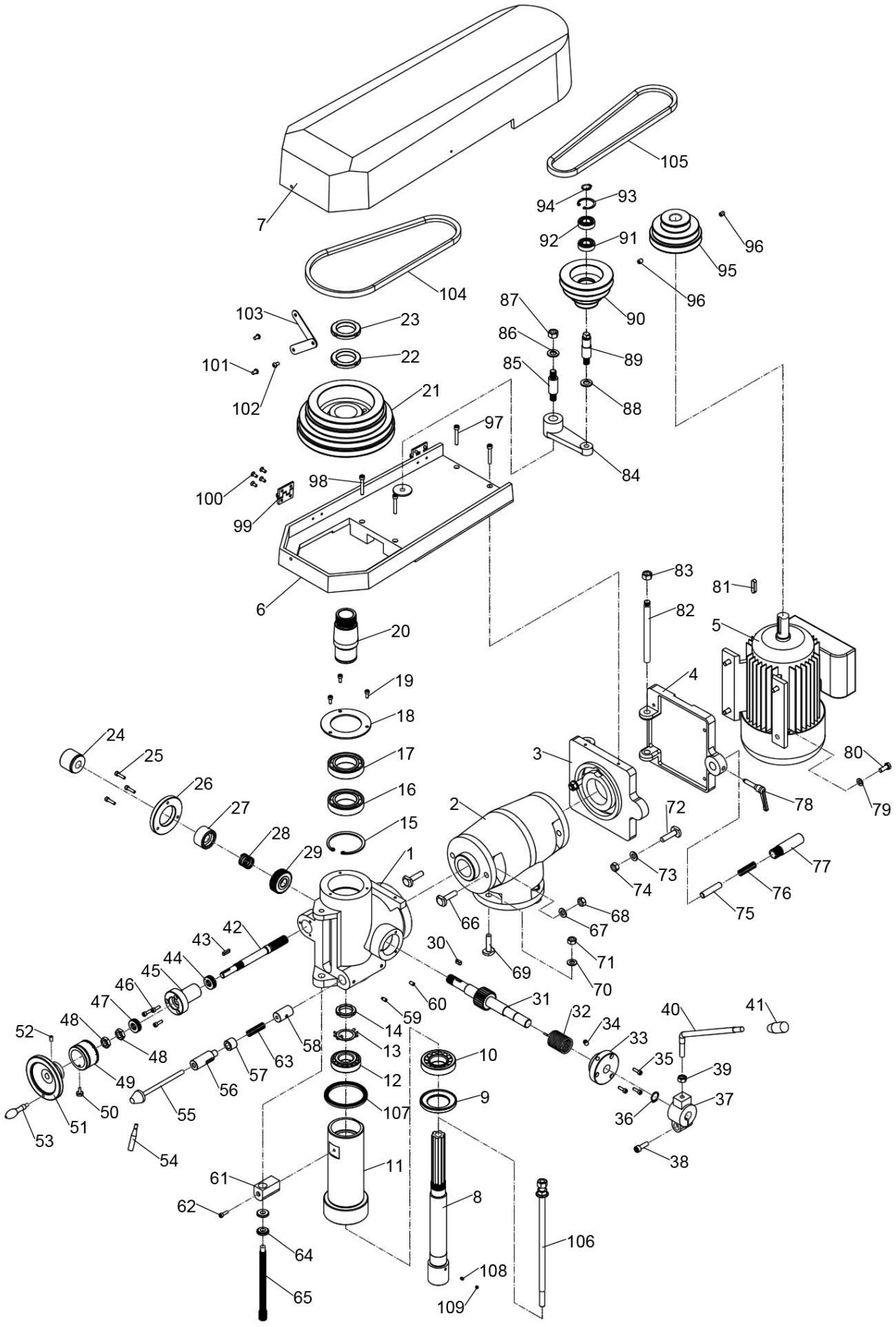
1
2
3
4
5
6
7
8
9
10
11
12
13
14
15
16
17
18
19
20
21
22
23
24
25
26
27
28
29
30
31
32
33
34
35
36
37
38
39
40
41
42
43
44
45
46
47
48
49
50
51
52
53
54
55
56
57
58
59
60
61
62
63
64
65
66
67
68
69
70
71
72
73
74
75
76
77
78
79
80
81
82
83
84
85
86
87
88
89
90
91
92
93
94
95
96
97
98
99
100
101
102
103
104
105
106
107
108
109

Head parts list

NO	PART	DESCRIPTION	QTY
1	ZX5015-06-02	Spindle head	1
2	ZX5015-06-01	Rocker arm bridge	1
3	ZX5015-06-47	Motor bracket	1
4	ZX5025-06-09	Motor plate	1
5		Motor	1
6	ZX5015-06-42.2	Shield plate	1
7	ZX5015-06-42.1	Shield plate	1
8		Spindle	1
9	ZX30-05-28	Cover	1
10	GB/T297-1994	Bearing 30207	1
11	ZX5025-06-03	Spindle sleeve	1
12	GB/T297-1994	Bearing 30206	1
13	GB/T858-1988	Lock washer 30	1
14	ZX5025-06-04.1	Lock nut M30x1.5	1
15	GB/T893.1-1986	Retaining ring 75	1
16	GB/T276-1994	Ball bearing 6009	1
17	GB/T276-1994	Ball bearing 6009	1
18	ZX30-05-19	Spindle cover	1
19	GB67-76	Screw M5x12	3
20	ZX5025-06-05	Shaft	1
21	ZX5015-06-24	Pulley	1
22	ZX5015-06-38.1	Nut	1
23	ZX5015-06-38.2	Lock nut	1
24	ZX5015-06-21	Nut	1
25	GB/T70.1-2000	Hex bolt M5x16	3
26	ZX5015-06-22	Left cover	1
27	ZX5015-06-18	Clutch	1
28	ZX5015-06-15	Spring	1
29	ZX5025-06-17	Gear	1
30	GB/T1096-2003	Key 6x15	1
31	ZX5025-06-06	Gear shaft	1
32	ZX5015-06-27	Spring	1
33	ZX5015-06-16	Right cover	1
34	JB/T7940.4-1995	Oil cup 8	1
35	GB/T70.1-2000	Hex bolt M5x20	3
36	GB/T894.1-1986	Retaining ring 19	1
37	ZX5015-06-37.1	Hand base	1
38	GB/T70.1-2000	Hex bolt M8x25	1
39	GB/T6175-2000	Hex nut M10	1

Head parts list

NO	PART	DESCRIPTION	QTY
40	ZX5015-06-37.2	Handle	1
41	JB/T7271.5-1994	Hand set M10x50	1
42	ZX5025-06-19	Gear shaft	1
43	GB/T1096-2003	Key 4x20	1
44	GB/T301-1995	Ball bearing 51102	1
45	ZX5015-06-20	Shaft sleeve	1
46	GB/T70.1-2000	Screw M5X16	3
47	GB/T301-1995	Ball bearing 51102	1
48	GB/T6173-2000	Hex nut M14x1.5	2
49	ZX5015-06-36	Graduated dial	1
50	ZX5105-05-07	Adjust screw	1
51	ZX5015-06-39	Handwheel	1
52	GB/T70.1-2000	Screw M5x16	1
53		Handle	1
54	ZX5025-06-33	Lock handle	1
55		Lock screw	1
56	ZX5025-06-30	Lock set	1
57	ZX5015-06-32	Spacer bush	1
58	ZX5025-06-31	Lock set	1
59	GB/T70.1-2000	Screw M6X12	1
60	GB/T70.1-2000	Screw M6X12	1
61	ZX5015-06-29.2	Limit plate	1
62	GB/T70.1-2000	Screw M5x16	1
63	ZX5015-06-13	Spring	1
64	ZX5015-06-29.2	Limit nut	2
65	ZX5015-06-29.1	Leadscrew	1
66	ZX5015-06-07	T bolt M10x40	2
67	GB/T97.1-2002	Washer 10	2
68	GB/T889.1-2000	Hex nut M10	2
69	ZX5015-06-07	T bolt M10x40	3
70	GB/T97.1-2002	Washer 10	3
71	GB/T889.1-2000	Hex nut M10	3
72	ZX5015-06-07	T bolt M10x40	2
73	GB/T97.1-2002	Washer 10	2
74	GB/T889.1-2000	Hex nut M10	2
75	ZX5015-06-12	Pin	1
76	ZX5015-06-13	Spring	1
77	ZX5015-06-11	Bush	1
78	ZX5015-06-14-01	Screw	1
79	GB/T97.1-2002	Washer 8	4

Head parts list

NO	PART	DESCRIPTION	QTY
80	GB/T5782-2000	Hex bolt M8x20	4
81	GB/T1096-2003	Key 8X35	1
82	ZX5015-06-10	Small Spindle	1
83	GB/T6175-2000	Hex nut M12	1
84	ZX5015-06-25.3	Connect plate	1
85	ZX5015-06-25.2	Small spindle	1
86	GB/T97.1-2002	Washer 12	1
87	GB/T889.1-2000	Hex nut M12	1
88	GB/T97.1-2002	Washer 12	1
89	ZX5025-06-25.4	Small spindle	1
90	ZX5025-06-25.1	Pulley	1
91	GB/T276-1994	Ball bearing 6003-2RS	1
92	GB/T276-1994	Ball bearing 6003-2RS	1
93	GB/T893.1-1986	Retaining ring 35	1
94	GB/T894.1-1986	Retaining ring 17	1
95	ZX5015-06-26	Motor pulley	1
96	GB/T70.1-2000	Screw M8X10	2
97	GB/T70.1-2000	Hex bolt M6x35	2
98	GB/T70.1-2000	Hex bolt M6x45	2
99		Connect plact 40x40	2
100	GB/T70.3-2000	Screw M5x12	8
101	GB/T70.1-2000	Screw M6X12	2
102	GB/T70.1-2000	Screw M6X12	1
103		Connect plate	1
104		“V” belt A838	1
105		“V” belt A800	1
106	ZX5025-05-18	Pull rod 7/16”-20	1
107	ZX30-05-28	Cushion	1
108	GB/T70.1-2000	Screw M5X6	1
109	GB/T70.1-2000	Screw M5X5	1
110			
111			
112			
113			
114			
115			
116			
117			
118			
119			

FINAL INSPECTION RECORD

NO	Inspection items		Illustrations	Tolerances	Measurements
1	Straightness of uppersurface of table		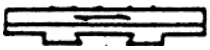	0.08	
2	Parallelism of table surface in cross movement			0.02/100	
3	Parallelism of table in longitudinal movement	In table longitudinal travel distance	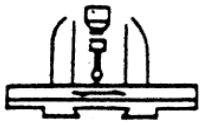	0.06	
4	Perpendiculari ty of table longitudonal an cross movement		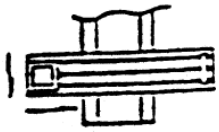	0.04/300	
5	Squareness of movement of main spindle head to upper surface of table	Right and left direction	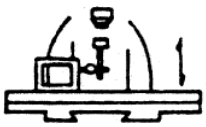	0.05/100	
		Forward an backword direction	 No. lower at the front end of table	0.05/100	
6	Squareness of upper surface of table to center line of main spindle	Right and left direction	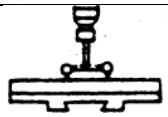	0.05/300	
		Forward an backword direction	 No. lower at the front end of table	0.05/300	
7	Spindle taper hold run-out		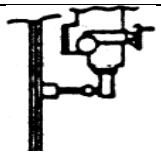	a:0.015 b:0.02	
8	Linearity of verticed movement of knee	Right and left direction		0.05/100	
		Forward an backword direction		0.05/100	

PACKING LIST FOR
GEARED HEAD DRILLING & MILLING MACHINE 626 Super Milling Machine

Series No : G/W :			Dimension : N/W :		
No.	Name	Spec	Model	Quantity	Remark
1	Milling & drilling machine		626 Super Milling Machine	1	
2	Draw bar	M12		1	
3	Adapter	MT3/MT2		1	
4	Taper shank for drilling chuck	MT3/B16		1	
5	Drilling chuck	Φ1～Φ13		1	
6	Arbor			1	
7	T slot bolt	M12×55		2	
8	Washer	12		2	
9	Nut	M12		2	
10	Inner hexagonal spanner	2.5/4、5、6、8		5	
11	Tilted wedge			1+1	
12	Spanner	12-14/17-19		1+1	
13	Oil gun			1	
14	Instruction Manual			1	
15	Certificate of inspection			1	
16	Packing list			1	

Packing inspector_____

Date_____