Super Lux B

Operation Manual

Chester UK Ltd
Clwyd Close
Hawarden Industrial Park
Hawarden
Chester CH5 3PZ

Tel: 01244 531631

WARNING: FAILURE TO FOLLOW THESE RULES MAY RESULT IN SERIOUS PERSONAL INJURY

As with all machinery there are certain hazards involved with operation and use of the machine. Using the machine with respect and caution will considerably lessen the possibility of personal injury. However, if normal safety precautions are overlooked or ignored, personal injury to the operator may result.

This machine was designed for certain applications only. We strongly recommend that this machine. NOT be modified and/or used for any application other than for which it was designed. If you have any questions relative to its application DO NOT use the machine until you have had detail instruction form your dealer.

SAFTEY RULES FOR ALL TOOLS

1. **FOR YOUR OWN SAFETY, READ THIS INSTRUCTION MANUAL BEFORE OPERATING THE TOOL. Learn the tool's application and limitations as well as the specific hazards peculiar to it.**
2. **KEEP GUARDS IN PLACE and in working order.**
3. **GROUND ALL TOOLS. If tool is equipped with three-prong plug, it should be plugged into a three-hole electrical receptacle. If an adapter is used to accommodate a two-prong plug receptacle, the adapter lug must be attached to a know ground . Never remove the third prong.**
4. **REMOVE ADJUSTING AND WRENCHES.**

Form habit of checking to see that keys and adjusting wrenched are removed form tool before turning it "on."

5. **KEEP WORK AREA CLEAN. Cluttered areas and benches invite accidents.**
6. **DON'T USE IN DANGEROUS ENVIRONMENT. Don't use power tools in damp or wet locations or expose them to rain. Keep work area well-lighted.**
7. **KEEP CHILDER AND VISITORS AWAY. All children and visitors should be keep a safe distance form work area.**
8. **MAKE WORKSHOP CHILDROOF-with padlocks, master switches, or by removing starter keys.**
9. **Don't force tool. It will do the job better and be safer at the rate for which it was designed.**
10. **USE RIGHT TOOL. Don't force tool or attachment to do a job for which it was not designed.**

11. WEAR PROPER APPAREL. No loose clothing, gloves, neckties, rings, bracelets, or other jewelry to get caught in moving parts. Nonslip foot wear is recommended. Wear protective hair covering to contain long hair.

12. ALWAYS WEAR EYE PROTECTION. Refer to ANSIZ87.1 Standard for appropriate recommendations. Also use face or dust mask if cutting operation is dusty.

13. SECURE WORK. Use clamps or a vise to hold work when practical. It's safer than using your hand and frees both hands to operate tool.

14. DON'T OVERREACH. Keep proper footing and balance at all times.

15. MAINTAIN TOOLS IN TOP CONDITION.

Keep tool sharp and clean for best and safest performance. Follow instructions for lubricating and changing accessories.

16. DISCONNECT TOOLS before servicing and when changing accessories such as blades, bits, cutters, etc.

17. USE RECOMMENDED ACCESSORIES.

Consult the owner's manual for recommended accessories. The use of improper accessories may cause hazards.

18. AVOID ACCIDENTAL STARTING. Make sure switch is in "OFF" position before plugging in power cord.

19. NEVER STAND ON TOOL. Serious injury could occur if the tool is tipped or if the cutting tool is accidentally contacted.

20. CHECK DAMAGED PARTS. Before further use of the tool, a guard or other part that is damaged should be carefully checked to ensure that it will operate properly and perform its intended function check for alignment of moving parts binding of moving parts, breakage of parts mounting, and any other conditions that may affect its operation. A guard or other part that is damaged should be properly repaired or replaced.

21. DIRECTION OF FEED. Feed work into a blade or cutter against the direction of rotation of the blade or cutter only.

22. NEVER LEAVE TOOL RUNNING UNATTENDED.TURN POWER OFF. Don't leave tool until it comes to a complete stop.

23. DRUGS ALCOHOL, MEDICATION. Do not operate tool while under the influence of drug, alcohol or any medication.

24. MAKE SURE TOOL IS DISCONNECTED FORM POWER SUPPLY while motor is being mounted, connected or reconnected.

ADDITIONAL SAFETY RULES FOR MILL DRILL

1. **BE SURE drill bit or cutting tool is securely locked in the chuck.**
2. **BE SURE chuck key is removed from the chuck before turning on power .**
3. **Adjust the table or depth stop to avoid drilling into the table.**
4. **SHUT OFF the power, remove the drill bit or cutting tool, and clean the table before leaving the machine.**
5. **CAUTION. When practical, use clamps or a vise to secure workpiece to keep the workpiece form rotating while the drill bit or cutting tool.**
6. **WARNING: FOR Your Own Safety Don't wear gloves when operating a mill/drill.**

SPECIFICATION

Model		Super Lux B		
Drilling capacity	cast iron	45mm		
	mild steel	32mm		
Face mill capacity		80mm		
End mill capacity		32mm		
Working table size		1000mm×240mm (800mm×240mm)		
Working table cross travel		190mm		
Working table longitudinal travel		760mm (560mm)		
T-slot size		14mm		
Head tilt left right		±45º		
Head swivel				
Spindle taper(option)		MT4/MT3/ISO30		
Max distance spindle to table		450mm		
Spindle stroke		120mm		
Spindle speed(rpm) (option)	Motor 1.1KW/1.5KW/50Hz		I	75180 280 6001000 1600
			II	150 360 560 1200 2000 3200
	Motor 1.1KW/1.5KW/60Hz		I	115 205 345 530 940 1575
			II	230 410 690 1060 1880 3150
Overall dimension		1250mm×960mm×1320mm		
Packing dimension		900mm×880mm×1150mm		
NW/GW Weight		320/360Kg		

WARNING: CHANGE SPEED ONLY WHEN MACHINE IS STOPPED

CHANGING THE GEAR BOX OIL

Tilt the head stock over as shown in Fig 1. Open the drain plug to allow the oil to drain form the opening completely. Then lock the oil drain plug and turn the head to be upright position. Remove the oil filler plug fill the oil to the gear until the oil lever reach the middle of oil fluid lever indicator. Then lock the plug.

IMPORTANT: The gear box lubrication oil: 32# mechanical oil, 3L. CHANGE OIL EVERY ONE YEAR.

CLEANNING

(1) Your machine has been coated with a heavy grease to protect it in shipping. This coating should be completely removed before operating the machine. Commercial degreaser, kerosene or similar solvent may be used to remove the grease form the machine, but avoid getting solvent on belts or other rubber parts.

(2) After cleaning, coat all bright work with a light lubrication. Lubricate all points with a medium consistency machine oil.

LUBRICATION:

All ball bearings in your mill/drill are sealed for lift, requiring no lubrication. Points requiring lubrication are:

(1) Internal spline drive assembly. Keep this area well lubricated with a good grade grease, insert grease in the hole at the top of spindle pulley spline driver, lube twice yearly.

(2) A light film of oil applied to the quill and column will reduce wear, prevent rust, and assure ease of operation.

(3) Quill return spring should receive oil (iso 20) once yearly. Remove cover plate and apply oil with squirt can or small brush.

(4) IMPORTANT: The gear box lubrication oil: 32# mechanical oil, 3L. CHANGE OIL EVERY ONE YEAR

(5) Apply lubricant to quill pinion every 90 days.

NOTE: use extreme care when performing this operation and keep hands clear of pinch points. When using paraffin bar, do this only by turning the sheaves by hand. Do not apply with motor running.

USE OF MAIN MACHINE PARTS

(1) To raise and lower the head-by-head handle.

(2) Equipped with an electric switch for tapping operation clockwise or counter clock wise.

(3) To adjust the quick or slow feeding by feed handle.

(4) To adjust the table left and right travel by table handle wheel.

(5) To adjust the table fore and after travel by table handle wheel.

(6) To operate the spindle handle wheel for micro feed.

(7) To adjust the scale size according to working need.

PRECAUTION OPERATION

Check all parts for proper condition before operation; if normal safety precautions are noticed carefully, this machine can provide you withstanding of accurate service.

(1) Before Operation

(a) Fill the lubricant

(b) In order to keep the accurate precision, the table must be free form dust and oil deposits.

(c) Check to see that the tools are correctly set and the workpiece is set firmly.

(d) Be sure the speed is not set to fast.

(e) Be sure everything is ready before use

(2) After Operation

(a) Turn off the electric switch.

(b) Turn down the tools.

(c) Clean the machine and coat it with lubricant.

(d) Cover the machine with cloth to keep out the dust.

(3) Adjustment of head

(a) To raise and lower the head, loosen the leaf screw located on the right side of the raise and lower base. When the desired height is reached tighten leaf screw to avoid vibration.

(b) Unscrew 3 nuts while the workpiece needs to be bevel turn to the degrees you wish on the scale, then screw the 3.

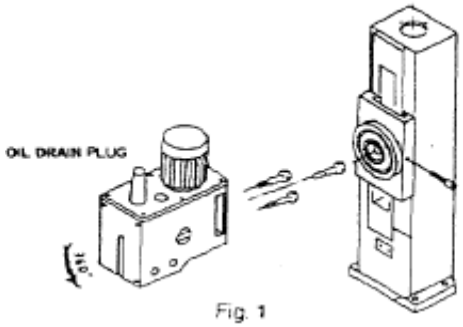

Fig. 1

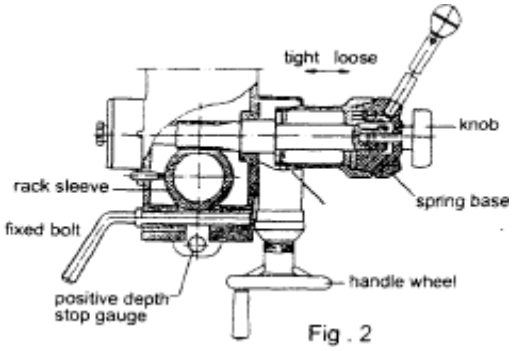

Fig . 2

QUILL RETURN SPRING ADJUSTMENT:

Spring tension for return of spindle, after hole drilling, has been pre-set at the factory. No further adjustment should be attempted unless absolutely necessary. Adjustment will probably be required if a multiple spindle drilling or tapping head is used. If adjustment is necessary , loosen lock screw while holding quill spring housing. Do not allow the housing to turn in your hand , or spring will unwind. Turn entire housing assembly clockwise the number of turns necessary to cause the quill to return to its up position. (NOTE: The flat of the spring housing pilot is lined up with the spring loading hole on the

body of the spring housing.) Reset lock screw make sure point of screw mates the flat on the housing journal.

(1) Preparing for Drilling (see fig.2)(Except addition power feed system). Turn of the knob make loose the taper body of worm gear and spring base. Then we decide spindle stroke setting the positive depth stop gauge for drilling blind hole or free state for pass hole.

(2) Preparing for milling (see fig.2)(Except addition power feed system)

(a) Adjust the positive depth stop gauge to highest point position.

(b) Turn tight of the knob be use to taper friction force coupling the worm gear and spring base. Then turning the handle wheel by micro set the spindle of work piece machining height.

(c) Lock the rack sleeve at the desired height with fixed bolt.

ADJUSTING TABLE SLACK AND COMPENSATE FOR WEAR(see fig.3)

(1) Your machine is equipped with jib strip adjustment to compensate for wear and excess slack on cross and longitudinal travel.

(2) Clockwise rotation the job strip bolt with a big screw for excess slack otherwise a little counter clockwise if too tight.

(3) Adjust the jib strip bolt until feel a slight drag when shifting the table.

CLAMPING TABLE BASE AND MACHINE BASE (See Fig.3)

(1) When milling longitudinal feed. It is advisable to lock the cross-feed table travel to insure the accuracy of your work. To do this, tighten the small leaf

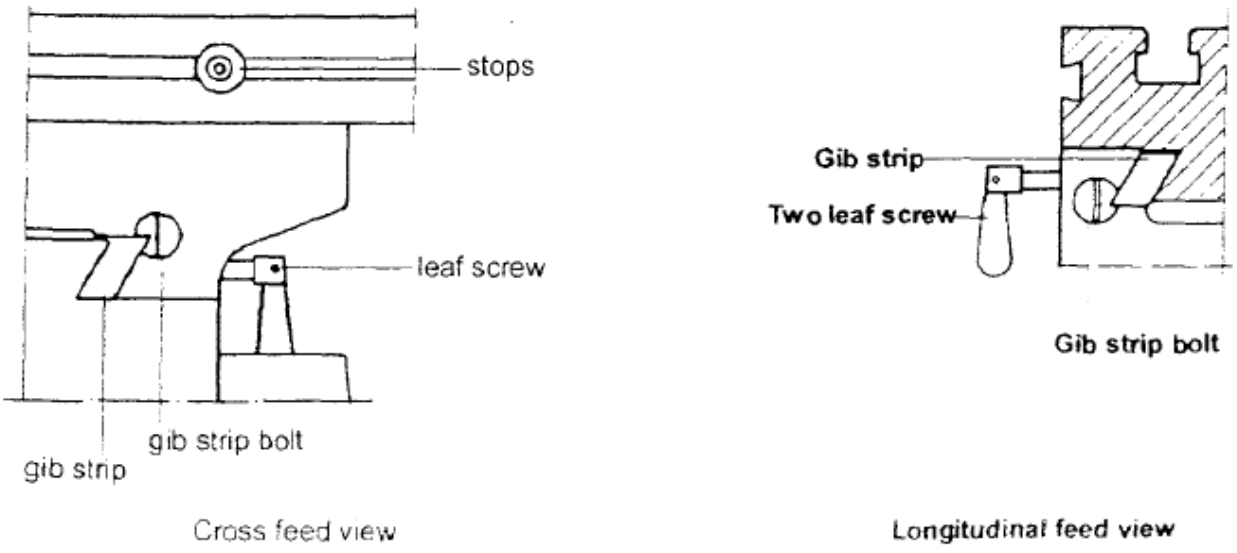

Fig.3

(2) To tighten the longitudinal feed travel of the table for cross feed milling, tighten the two small leaf screw on the front of the table base.

(3) Adjustable travel stops are provide on the front of the table for control of cross travel and the desired milling length.

TO CHANGE TOOLS

(1) Removing Face Mill or Drill Chuck Arbor

Loosen the arbor bolt at the top of the spindle shaft approximately 2 turns with a wrench. Tap the top of the arbor bolt with a mallet.

After taper has been broken loose, holding chuck arbor on hand and turn detach the arbor bolt with the other hand.

(2) To install Face Mill or Cutter Arbor

Insert cutter and cutter arbor bolt detach securely, but do not over-tighten.

(3) Removing Taper Drills

(a) Turn down the arbor bolt and insert the taper drill into the spindle shaft.

(b) Turn the rapid down handle rod down until the oblong hole in the rack sleeve appears. Line up this hole with the hole in the spindle. Insert key punch key through holes and strike lightly with a mallet. This will force the taper drill out.

SPECIFICATION OF T-SLOT

The size of T-Solt on table as fig.4

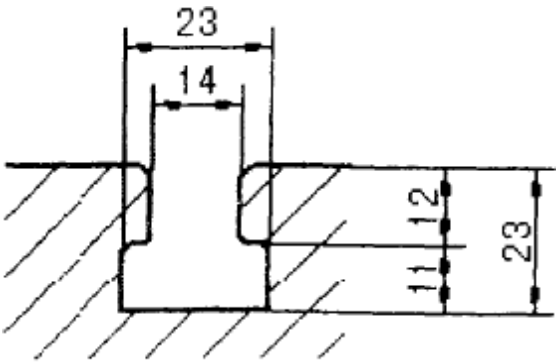

Fig.4

TROUBLE SHOOTING HINTS

TROUBLE	PROBABLE CAUSE	REMEDY
Excessive Vibration	1. Motor out of balance 2. Bad motor	1. Balance or replace problem motor. 2. Replace motor
Motor stalls	1. Over feeding. 2. Dull drill. 3. Motor not building up to running speed. 4. Bad motor	1. Replace feed rate. 2. Sharpen drill and keep sharp. 3. Replace or repair motor .Check fuses in all three legs on three phase motors and replace if necessary. 4. Replace motor
Noisy Operation	1. Excessive vibration 2. Improper quill adjustment. 3. Noisy spline. 4. Noisy motor	1. Check remedy under excessive vibration. 2. Adjust quill. 3. Lubricate spline. 4. Check motor bearing or for loose motor fan.
Drill or Tool heats up or burns work	1. Excessive speed. 2. Chips not clearing. 3. Dull tool. 4. Feedreate too slow. 5. Rotation of drill incorrect. 6. Failure to use cutting oil or coolant (on steel)	1. Reduce speed. 2. Use pecking operation to clear chips. 3. Sharpen tool or replace. 4. Increase feed enough to clear chips. 5. Reverse motor rotation. 6. Use cutting oil or coolant on steel
Drill leads off	1. No drill spot. 2. Cutting lips on drill off center. 3. Quill loose in head. 4. Bearing play.	1. Center punch or center drill workpiece. 2. Regrind drill. 3. Tighten quill. 4. Check bearings and reseat or replace if necessary.
Excessive drill runout or wobble	1. Bent drill. 2. Bearing play. 3. Drill not seated properly in chucks.	1. Replace drill. Do not attempt to straighten. 2. Replace or reseat bearings. 3. Loosen , reseat and tighten chuck.
Work or fixture comes loose or spins	1. Failure to clamp workpiece or work holding device to table.	1. Clamp workpiece or work holding device to table surface.

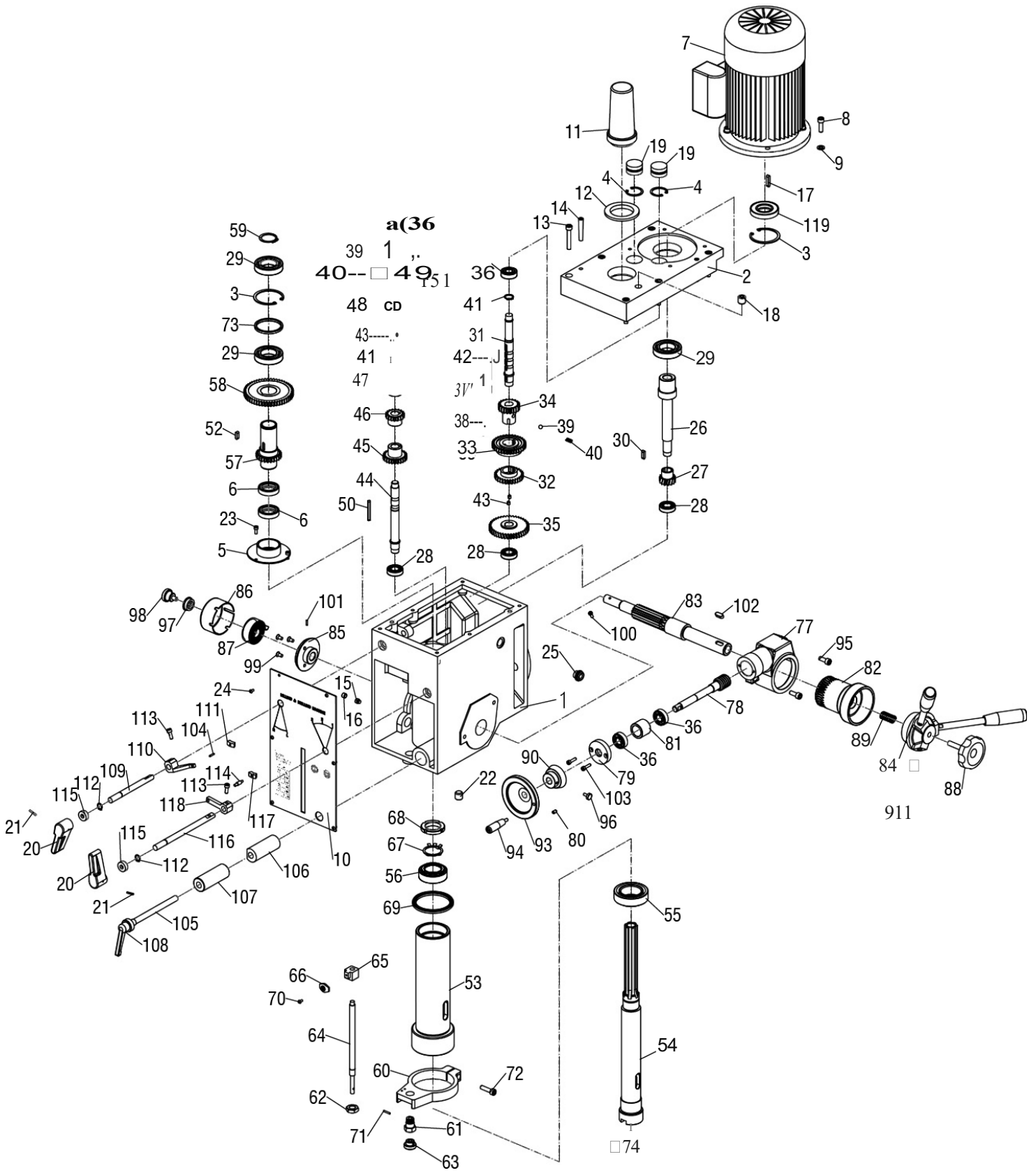
a(36
39 1
40--□49
151
48 CD
43
41
47
42
3V'
38
911
□74

Head parts for spindle power feed

No	Qty.	Code	Name	No	Qty.	Code	Name
1	1	20010B	head body	37	1	6X14	key
2	1	20011B	head body cover	38	1	6X28	key
3	2	φ 62	Int retaining ring	39	2	φ 8	ball
4	2	φ 35	Int retaining ring	40	2		spring
5	1	20018B	airtight base	41	2	φ 18	Ext retaining ring
6	2	45×35X10	airtight ring	42	1	5X50	key
7	1	1.5KW	motor	43	4	M6X12	screw
8	1	M8X25	screw	44	1	20107B	III shaft
9	1	8	washer	45	1	20109-B	Gear Z25
10	1	20201	plate	46	1	20110-2-B	Gear Z18
11	1	20304-1B	arbor bolt cover	47	1	20112-B	Gear Z32
12	1	20304-2B	arbor bolt cover base	48	1	20113-B	Gear Z43
13	6	M8X45	screw	49	1	20115-B	Gear Z16
14	2	8×40	pin	50	1	5X50	key
15	1	M10×10	screw	51	1	6X18	key
16	1	M10×8	screw	52	1	6X18	key
17	1	6X28	key	53	1	20019	spindle sleeve
18	1	ZG3/8”	bolt	54	1	20104B	spindle
19	2	20020B	cap	55	1	30207 /P5	bearing
20	2	20307B	speed lever	56	1	30206 /P5	bearing
21	2	3X18	pin	57	1	20114-B	splined sleeve Z25
22	1	ZG3/8”	oil plug	58	1	20116-B	Gear Z53
23	3	M5x10	screw	59	1	φ 35	Ext retaining ring
24	6	M4X8	screw	60	1	20012	feed base
25	1	M18X1.5	oil pointer	61	1	20128	support base
26	1	20105B	I shaft	62	1	20129	nut
27	1	20105-1-B	Gear Z14	63	1	20130	knob
28	3	6003 / P5	bearing	64	1	20131	graduated rod
29	3	6007 / P5	bearing	65	1	20021	fixed bolt
30	1	5X25	key	66	1	20132	scale board
31	1	20106B	II shaft	67	1	φ 30	lock washer
32	1	20108-B	Gear Z29	68	1	M30X1.5	lock nut
33	1	20110-1-B	Gear Z35	69	1	20308	rubber washer
34	1	20111-B	Gear Z21	70	1	M4X8	screw
35	1	20106-1-B	Gear Z41	71	1	3X18	split pin
36	4	6202 / P5	bearing	72	1	M8X30	bolt

No	Qty.	Code	Name
73	1	20024B	separating ring
74	1	20133B	Bearing cover
75	1	M5X6	Screw (R8)
76	1	M5X4	Pin (R8)
77	1	20015	worm wheel box
78	1	20119	worm shaft
79	1	20302	worm cover
80	1	M6X12	screw
81	1	20120	separating ring
82	1	20016	worm wheel
83	1	20117	pinion shaft
84	1	20013	handle body
85	1	20118	spring base
86	1	20123	spring cap
87	1	20122	spring plate
88	1	20303	big ripple handle
89	1		compression spring
90	1	20017	graduated plate
91	1	20121B	handle rod
92	1	20301B	handle ball
93	1	20306B	handle wheel
94	1	20305-B	handle rod
95	2	M8X25	screw
96	1	10107	screw
97	1	203063	washer
98	1	203066	screw
99	3	M6X12	screw
100	1	M5X12	screw
101	2	3X12	pin
102	1	8X20	key
103	2	M5X20	screw
104	1	3X15	pin
105	1	20124B	fixed bolt
106	1	20203B	fixed tight block
107	1	20202B	fixed tight block

No	Qty.	Code	Name
108	1		adjust handle
109	1	20125B	lever shaft
110	1	20022-1B	lever
111	1	20204-2B	lever bracket
112	2	12	Ext retaining ring
113	2	M6X16	screw
114	1	20204-3B	lever rod
115	2	12X22X8	oil seal
116	1	20126B	long lever shaft
117	1	20204-1B	lever bracket
118	1	20022-2B	lever
119	1	35x62x10	oil seal

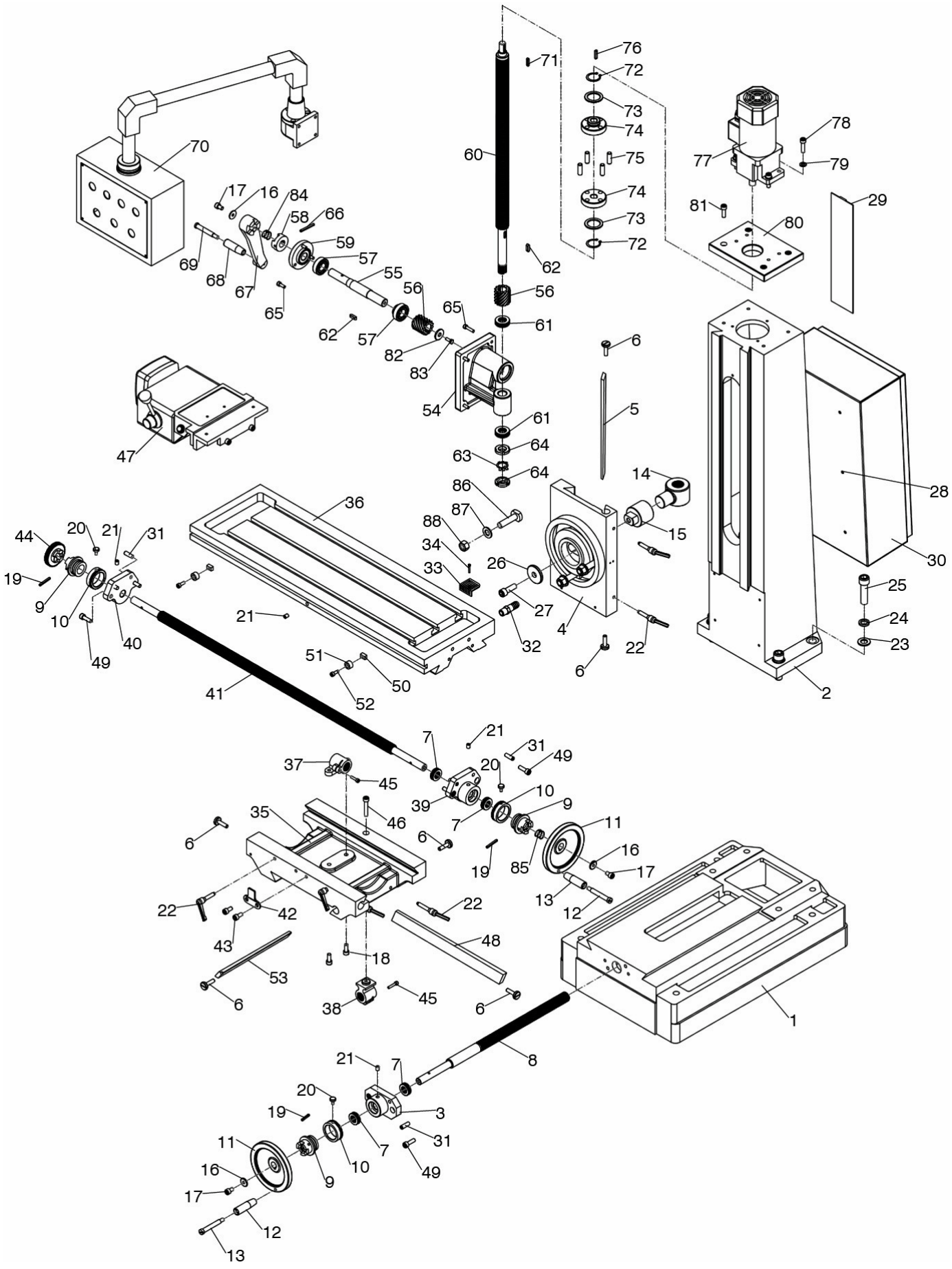

70
17
16
84
58
66
59
57
55
56
65
69
68
67
62
57
82
83
54
60
71
76
72
73
74
75
74
73
72
62
56
61
65
6
5
61
64
63
64
47
14
15
86
87
88
34
33
26
27
32
4
22
6
36
44
20
21
31
19
9
10
40
49
21
51
50
52
41
28
30
25
24
23
2
7
21
31
49
20
37
45
39
10
9
7
11
35
46
6
6
19
85
16
17
13
12
22
42
43
22
48
18
53
6
38
45
6
1
8
21
7
20
3
19
31
11
7
10
49
16
9
17
12
13

No	Qty	Code	Name	No	Qty	Code	Name
1	1	10010	base	45	2	M5X20	screw
2	1	10013	column	46	1	M8X45	screw
3	1	10021	square flange	47	2	135LBS	（Power feed）
4	1	10016	raise and lower base	48	1	10022	gib strip
5	1	10025	gib strip	49	6	M8X25	screw
6	6	10106	screw	50	2	10108	movable fixed block
7	4	51103	bearing	51	2	10109	fixed block support
8	1	10104	table screw	52	2	M6X16	screw
9	3	10102	dial clutch	53	1	10023	gib strip
10	3	10111	graduated plate	54	1	10017	raise and lower base
11	2	10301	wheel	55	1	10113	shaft
12	2	20305-1B	turn handle	56	2	20109	gear
13	2	20305-2B	screw	57	2	6004	bearing
14	1	10024	nut	58	1	450209	dial clutch
15	1	10117	nut bracket	59	1	10015	flange
16	3	6	washer	60	1	10016	raise and lower screw
17	3	M6X16	screw	61	2	51104	bearing
18	2	M8X25	screw	62	2	6 X 20	key
19	3	5X35	pin	63	1	20	lock washer
20	3	10107	screw	64	2	M20X1.5	lock nut
21	4	8	oil cup	65	7	M6 X 25	screw
22	6	M8	fixed handle	66	1	5 X 40	pin
23	4	16	washer	67	1	10018	heaf handle
24	4	16	washer	68	1	10018.1	turn handle
25	4	M16X60	bolt	69	1	10018.2	Screw M10
26	1	10120	washer	70	1		Electrical box
27	1	M12X35	screw	71	1	5X22	key
28	6	M6x12	screw	72	2	30	retaining ring
29	1	10124	protecting cover	73	2	10152	washer
30	1	10119	Electrical box	74	2	10150	
31	6	8X30	pin	75	4	10151	
32	1		Pipe joint	76	1	5X25	key
33	1		Filter screen	77	1	Motor	90W220V60Hz1ph
34	2	M3X25	table nut	78	4	M8X25	screw
35	1	10011	center base	79	4	8	washer
36	1	10012	table	80	1	10014	motor mount
37	1	10202	table nut	81	4	M8 X 25	screw
38	1	10203	table base nut	82	1	8	washer
39	1	10020	right flange	83	1	M8 X 25	screw
40	1	10019	left flange	84	1	450209.2	Spring
41	1	10103	table screw	85	1	10102.2	Spring
42	1	10105	fixed block	86	3	M14x55	T-screw
43	2	M8x16	screw	87	3	14	washer
44	1		Gear	88	3	M14	nut

ACCURACY TEST FOR MILLING & DRILLING MACHINE		Total 2	
		P1	
No.	Checking items	Tolerance	Error tested
G1	**The flatness of worktable surface** 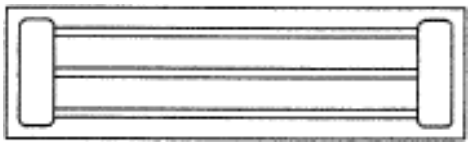	**0.025 for any tesred length 200 Max 0.08**	
G2	**Squareness of worktable longitudinal movement to cross movement** 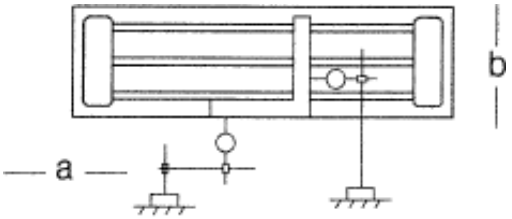	0.04/300	
G3	**Parallelism of worktable longitudinal movement to the base T-slot** 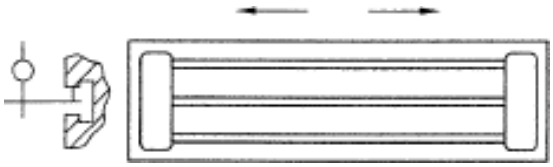	0.05	
G4	**Ran-out of spindle hole center line** 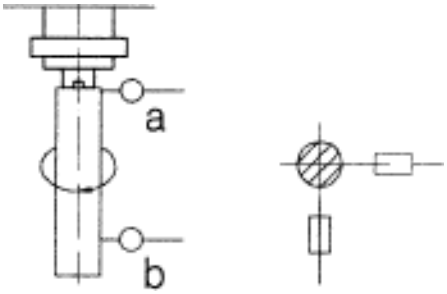	**a) Near spindle nose 0.015** **b) At a distance of 100 form spindle nose 0.02**	

ACCURACY TEST FOR MILLING & DRILLING MACHINE		Total 2	
		P1	
No.	Checking items	Tolerance	Error tested
G5	**Parallelism of worktable movement to worktable surface** 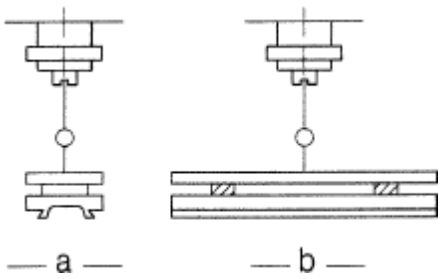	**a 0.02 for any 100 testing length** **b 0.0.3 for any 300 testing Max 0.06**	
G6	**Squarencess of spindle rotating line to worktable surface** 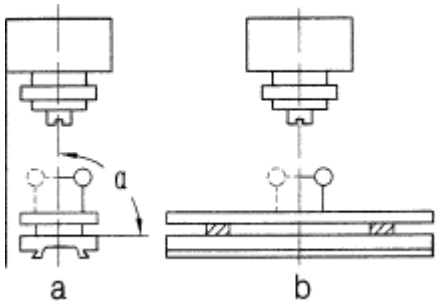	**a 0.05/300** **a≤90º** **b 0.05/300**	
G7	**Squareness of spindle sleeve vertical movement to worktable surface** 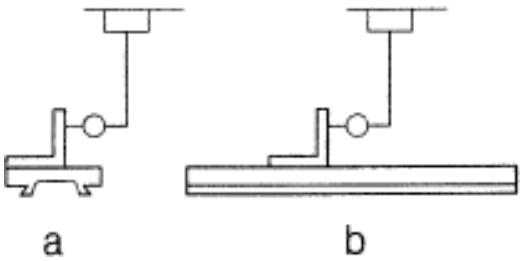	**a 0.05/100** **b 0.05/100**	

PACKING LIST FOR

GEARED HEAD DRILLING & MILLING MACHINE Super Lux B

Series No : G/W :			Dimension : N/W :		
No.	Name	Spec	Model	Quantity	Remark
1	Milling & drilling machine		Super Lux B	1	
2	Draw bar	M12		1	
3	Adapter	MT3/MT2		1	
4	Taper shank for drilling chunck	MT3/B16		1	
5	Drilling chuck	Φ1～Φ13		1	
6	Arbor			1	
7	T slot bolt	M12×55		2	
8	Washer	12		2	
9	Nut	M12		2	
10	Inner hexagonal spanner	2.5/3、4、5、8		5	
11	Tilted wedge			1+1	
12	Spanner	17-19/19-22		1+1	
13	Oil gun			1	
14	Instruction Manual			1	
15	Certificate of inspection			1	
16	Packing list			1	